To buy, sell, rent or trade-in this product please click on the link below:
https://www.avionteq.com/CTRL-Systems-B00033-UL101-Aviation-Troubleshooter
AvionTEq
Trusted Test Equipment & Tooling Solutions
www.avionteq.com

Ultrasound Condition Based Monitoring (CBM) and Leak Detection

PRODUCT CATALOG

Selected for International Space Station, Navy, Army, Air Force & More

No matter which direction you're headed, CTRL has a product or program for you

CTRL SYSTEMS

CTRL UL101 Ultrasound Detector Technology

The CTRL UL101 detects and converts ultrasound produced by mechanical, pneumatic, hydraulic, and electrical systems. Changes in the amplitude and characteristics of the ultrasound are easily detected in noisy plant environments. Leaks are easily pinpointed. Equipment problems are diagnosed even earlier than other technologies such as vibration, infrared inspection, or oil analysis.

UL101 Ultrasound Detector Applications

Leak Detection

Indicate and locate pressurized and non-pressurized system leaks of any type of gas.

Motor Bearings & Gearboxes

Easily distinguish the different sounds produced by motor bearings in different conditions such as under lubrication, over lubrication, and excessive wear.

Valves & Steam Traps

Detect internal by-pass leaks and diagnose proper operation conditions.

Electrical Inspection

Detect arcing, tracking, and corona discharge in low, medium, or high voltage.

Intrinsically Safe: ANSI/UL 913-88, for DIVISION 1, CLASS I, Groups A, B, C and D, CLASS II, Groups E, F, G and CLASS III. It also complies with DIVISION 2, CLASS I, Groups A, B, C and D, CLASS II, Groups F, G, and CLASS III.

UL101 Ultrasound Detector Benefits

Finds all turbulent flow leaks

Most sensitive detector on the market today for compressed air/gas, vacuum, valve, etc. leak detection.

Easier to use

Turn the receiver on, adjust sensitivity, and begin testing.

Does not require calibration

Begin testing immediately. There is no need to calibrate or routinely send back to the factory.

Longer battery life

A single, 9-Volt battery powers the receiver for more than 45 continuous hours.

Complements vibration analysis or infrared

Add the UL101 to your predictive maintenance routines for instant feedback.

Designed for a wide range of applications

Leak detection, mechanical & rotating equipment tests, electrical arcing & corona discharge detection.

Standard or intrinsically safe models

Intrinsically safe models can be used in explosive atmospheres.

InCTRL Condition Based Monitoring (CBM)

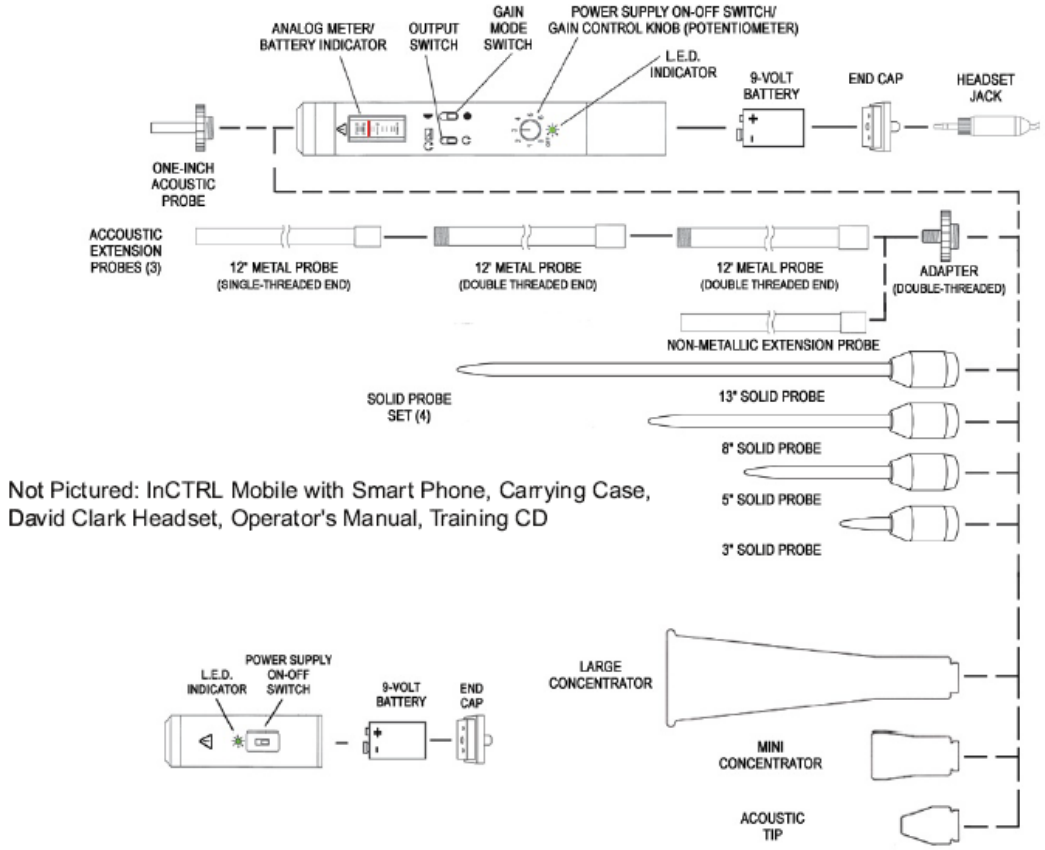

The First Step to Predictive Maintenance to Reduce Production Downtime!

InCTRL is a cloud-based application developed by CTRL to enable corporations to analyze, trend, and report upon the condition of the critical production equipment in manufacturing facilities. The InCTRL Mobile app records the ultrasound directly from the CTRL UL101, using a standard Android Smart Phone, and instantaneously uploads to the cloud-based program for historical comparison and analysis.

This process and cloud based sharing provides a more efficient way to quickly convey information from the tech to maintenance manager, to plant manager, and throughout the organization to duplicate the benefits of ultrasound condition based monitoring for all locations. All of the program's benefits are magnified with better communication and faster integration throughout the organization's decision makers.

Instantly see, hear, monitor & diagnose

Bearings, Gears, Pumps, Valves, & Cylinders.

Comparison Analysis

Compare ultrasound readings of similar equipment.

Baseline Analysis

Set a baseline and trend the ultrasound readings over time, looking for changes.

Threshold

Set the RMS threshold level; get an e-mail alert when RMS rises too high.

Bearing Health Assessment

InCTRL indicates if bearing is "normal", "under lubricated", "suspect", or "questionable".

FFT for Electrical Inspection

Harmonics, RMS, & EPS help indicate mechanical looseness, corona, or arcing.

InCTRL Condition Based Monitoring (CBM)

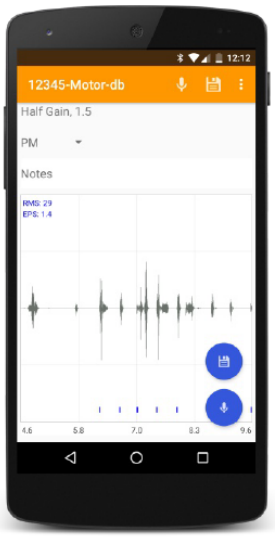

InCTRL Mobile with Android Phone
for Data Acquisition and Real-Time Assessment

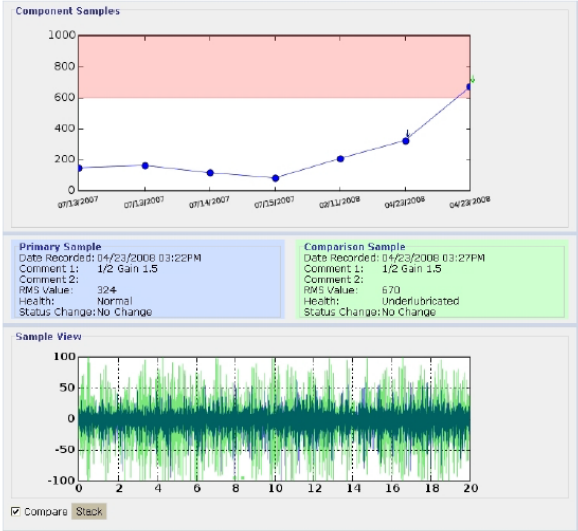

InCTRL is a Web-Based Application with Secure
Access to Data From Anywhere

Condition Based Monitoring

Under-Lubrication

When bearings lose their lubrication, the first indication is through ultrasound. The RMS (overall average amplitude) level rises dramatically. A comparison to the bearing's history and a previously set baseline will send an automatic email notification for call to action.

Over-Lubrication

Likewise, when a bearing has too much lubrication, the RMS is used to indicate that no ultrasound is being produced.

Excessive Wear

As a bearing shows signs of wear, the subtle impacts are amplified and clearly indicated with CTRL's unique algorithms that help identify "Events Per Second" (EPS). The software compares changes to EPS and RMS with the bearing's history and identifies the current condition as suspect or questionable. Replacement of the bearing can be scheduled during routine shutdown without fear of catastrophic failure.

Other Mechanical Operations

Any mechanical equipment produces ultrasound, for which the UL101 together with the software can provide immediate, historical, and comparative analysis to assess the condition. Changes to any condition from the "norm" are apparent.

InCTRL Features

Web-based

Access ultrasound test data from the Internet

Wireless Uploads

Upload ultrasound samples wirelessly from SoundCTRL

Flags & Sends Email Alerts

Flags and sends alerts when amplitude exceeds set threshold

Bearing Health Assessments

Responses include: under lubricated, normal, suspect, questionable

Stack & Overlay Ultrasound Waveforms

Detect early signs of equipment wear

Trend Ultrasound Data

Plot root mean square calculations overtime

Reporting

Create reports for cost justification, meetings and long-term planning

Multiple Location Deployment

Corporate-wide implementation

Share Data

Share data with other departments or with multiple plants around the world

InCTRL Condition Based Monitoring Packages

InCTRL CBM Package Standard Model

CTRL Model	Intrinsically Safe	CTRL Part #	DLA Part #	NSN
	No			

Kit Components	CTRL Part #	DLA Part #	NSN
UL101 Troubleshooter (Standard Model)	000031		
InCTRL Mobile App for Data Acquisition	free download on Google Play Store		
InCTRL Initial Year 1	041000		
InCTRL Cables for sensor	008030		
Android Smartphone	008150		
On-Site Training	090030		

InCTRL CBM Package Intrinsically Safe* Model

CTRL Model	Intrinsically Safe	CTRL Part #	DLA Part #	NSN
	Yes			

Kit Components	CTRL Part #	DLA Part #	NSN
UL101 Troubleshooter (Intrinsically Safe Model)	000033		
InCTRL Mobile App for Data Acquisition	free download on Google Play Store		
InCTRL Initial Year 1	041000		
InCTRL Cables for sensor	008030		
Android Smartphone	008150		
On-Site Training	090030		

* The CTRL UL101 Troubleshooter Kit (p/n 000033) is certified by CTRL as Intrinsically Safe: ANSI/UL 913-88, for DIVISION 1, CLASS I, Groups A, B, C and D, CLASS II, Groups E, F, G and CLASS III. It also complies with DIVISION 2, CLASS I, Groups A, B, C and D, CLASS II, Groups F, G, and CLASS III.

Already have an ultrasound sensor? Ask about:
InCTRL Connectivity
to take advantage of InCTRL with other sensors

CTRL UL101 Troubleshooter

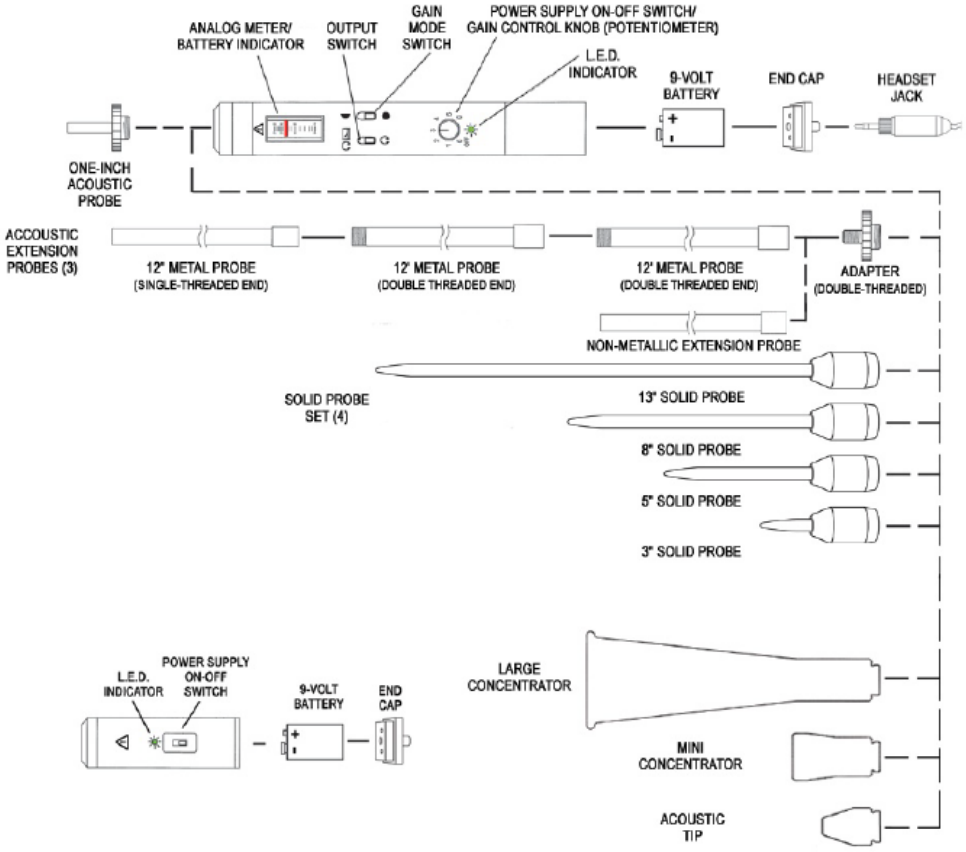

CTRL UL101: More Than A Leak Detector

Ultrasound detectors designed with the right technology and software can be used for condition monitoring and predictive maintenance. Using the UL101 regularly will minimize production downtime, improve quality control and safety, and decrease man-hours by improving troubleshooting capabilities.

The CTRL UL101 ultrasound detector is capable of accurately interpreting the sounds created by under lubrication, over lubrication, and early signs of wear. The right ultrasound technology is a fast and effective means of determining such conditions in moving, mechanical components such as bearings, gearboxes, motors, compressors, etc.

Valve Inspection

Save money by locating internal by-pass leaks with a single point inspection.

Motor Bearing & Gearbox Diagnostics

Quickly identify bad bearings, even before vibration or heat occurs.

Quality Control

Develop test procedures that reduce waste and improve performance.

Non-Pressurized Vessel Testing

Use the Ultrasound Transmitter to test the weld beads and gaskets of vessels without pressurizing.

GSA Advantage!®

GSA Contract Number: GS-06F-0001N

Cage Number: 62373

CTRL UL101 AVIATION TROUBLESHOOTER

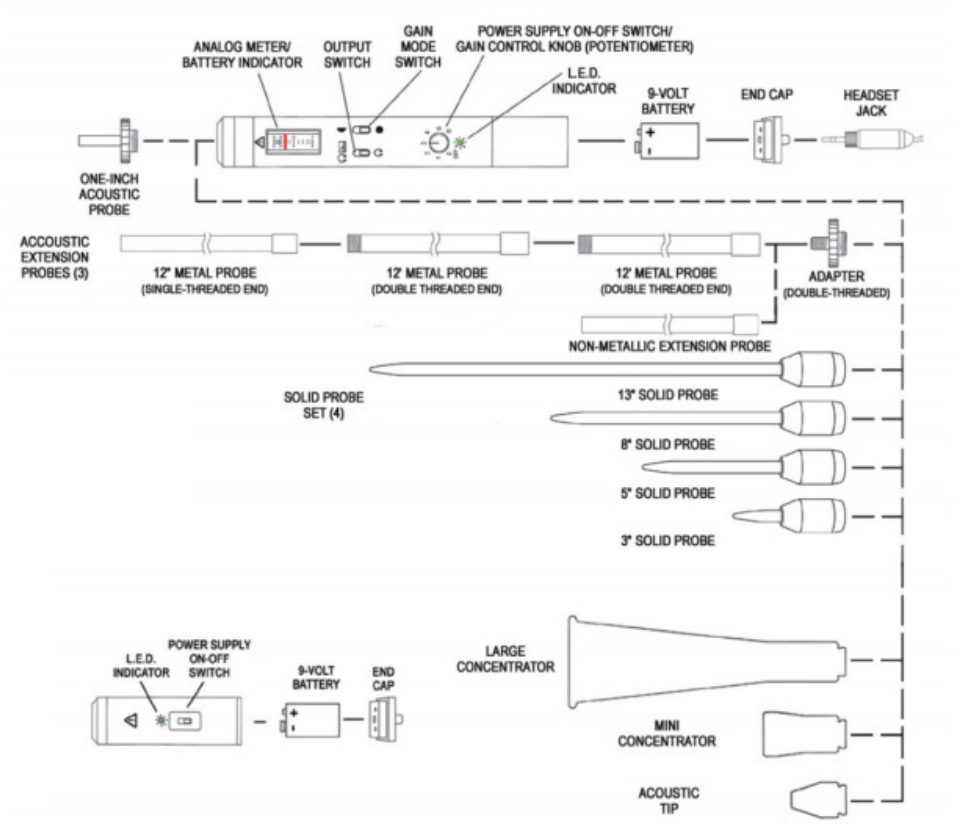

Applications on all Boeing Commercial jet aircraft

The **CTRL UL101 Aviation Troubleshooter** converts ultrasound signals produced by industrial machinery and vehicles into easily recognizable audible sounds so the Aircraft Maintenance Technicians can quickly locate leaks in various systems on all Boeing Commercial jet aircraft.

Applications:

- Pressurization Leak Tests
- Air Conditioning Leak Checks
- Bleed Air Checks (Airframe and Engine)
- Hydraulic Bypassing | Pitot Static Check
- Oxygen
- Evacuation Slides, Tires & Other Pressure Components

Instantaneous.

The CTRL UL101 Aviation Troubleshooter is the approved instrument for minimizing cost of delay related to the applications listed in the AMM for all Boeing Commercial jet aircraft. With the UL101, processes that used to take days can be accomplished in single hour.

Superior sound clarity.

Easily distinguish the different sounds produced by systems leakage and quickly pinpoint the exact location of the fault using the UL101. No other ultrasound device on the market offers similar noise-to-signal ratio, ease of use, or sound quality. Never miss a fault with the UL101.

Recommend in the Aircraft Maintenance Manual (AMM) for all Boeing Commercial jet aircraft
CTRL Part No. B00033 / Boeing Tool Tag SPL-1473

CTRL UL101 Troubleshooter

UL101 Troubleshooter Standard Model (p/n 000031)

CTRL Model	Intrinsically Safe	CTRL Part #	DLA Part #	NSN
UL101-E	No	000031		

Kit Components	CTRL Part #	DLA Part #	NSN
UL101 Receiver (Standard Model)	026005	10015	6635 01 270 6829
UT2000 Universal Transmitter (Standard Model)	026010	20108	6625 01 270 6828
Headset	025015	30101	5965 01 270 6832
Carrying Case	020019	30100	6625 01 270 6830
1-inch Acoustic Probe	070035		6635 01 579 6899
Acoustic Extension Probe Set (5 Pieces)	000005	10114	5355 01 270 6833
Solid Probe Set (4 Pieces)	000050		6625 01 658 6145
Concentrator Set (3 Pieces)	000065		6635 01 579 6932
Operator's Manual	005010		

UL101 Troubleshooter Intrinsically Safe Model (p/n 000033)

CTRL Model	Intrinsically Safe	CTRL Part #	DLA Part #	NSN
UL101-ISE	Yes	000033		6635 01 587 1093

Kit Components	CTRL Part #	DLA Part #	NSN
UL101 Receiver (Intrinsically Safe Model)	026007		6635 01 578 7933
UT2000 Universal Transmitter (Intrinsically Safe Model)	026012		5480 01 658 4493
Headset	025015	30101	5965 01 270 6832
Carrying Case	020019	30100	6625 01 270 6830
1-inch Acoustic Probe	070035		6635 01 579 6899
Acoustic Extension Probe Set (5 Pieces)	000005	10114	5355 01 270 6833
Solid Probe Set (4 Pieces)	000050		6625 01 658 6145
Concentrator Set (3 Pieces)	000065		6635 01 579 6932
Operator's Manual	005010		

Intrinsically Safe: ANSI/UL 913-88, for DIVISION 1, CLASS I, Groups A, B, C and D, CLASS II, Groups E, F, G and CLASS III. It also complies with DIVISION 2, CLASS I, Groups A, B, C and D, CLASS II, Groups F, G, and CLASS III.

*TO assigned by U.S. Air Force

CTRL UL101 Leak Detector

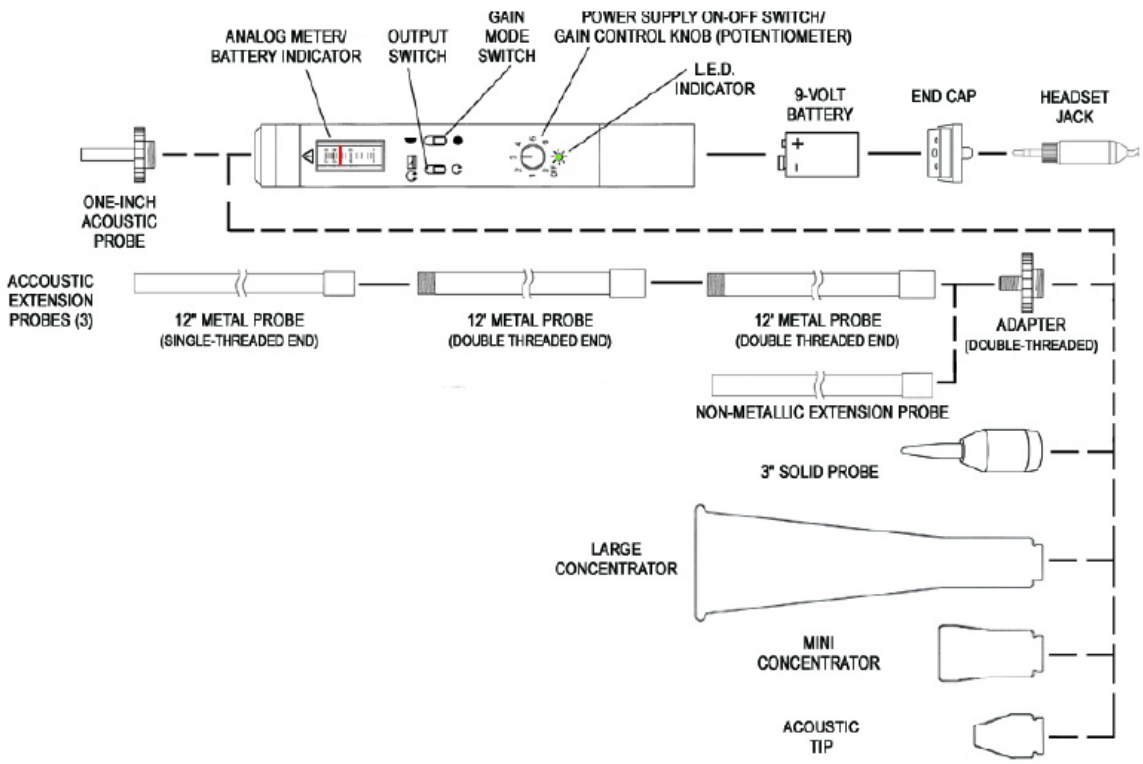

CTRL Leak Detector

The CTRL UL101 Leak Detector contains attachments for airborne ultrasound applications. This includes leak detection of any type of gas, vacuum leak detection, steam leak detection, and electrical inspection. Additionally, the kit includes a single 3-inch solid probe for diagnosing steam traps and valves by detecting internal by-pass leaks.

Leak Detection

Compressed Air For Energy Savings
Leaks account for 20% - 30% of the energy usage of a compressor.

HVAC

Ultrasound is not affected by wind.

Expensive Gas (Any Type)

Finding one Nitrogen leak has immediate ROI .

Steam Leaks

Improve steam system efficiencies and save money.

CTRL UL101 Leak Detector

UL101 Leak Detector Standard Model (p/n 000036)

CTRL Model	Intrinsically Safe	CTRL Part #	DLA Part #	NSN
UL101-SA	No	000036		

Kit Components	CTRL Part #	DLA Part #	NSN
UL101 Receiver (Standard Model) - no transmitter	026005	10015	6635 01 270 6829
Headset	025015	30101	5965 01 270 6832
Carrying Case	020019	30100	6625 01 270 6830
1-inch Acoustic Probe	070035		6635 01 579 6899
Acoustic Extension Probe Set (5 Pieces)	000005	10114	5355 01 270 6833
3-inch Solid Probe	040045		6635 01 579 6901
Concentrator Set (3 Pieces)	000065		6635 01 579 6932
Operator's Manual	005010		

UL101 Leak Detector Intrinsically Safe Model (p/n 000038)

CTRL Model	Intrinsically Safe	CTRL Part #	DLA Part #	NSN
UL101-ISA	Yes	000038	000038	6635 01 534 2512

Kit Components	CTRL Part #	DLA Part #	NSN
UL101 Receiver (Intrinsically Safe Model) - no transmitter	026007		6635 01 578 7933
Headset	025015	30101	5965 01 270 6832
Carrying Case	020019	30100	6625 01 270 6830
1-inch Acoustic Probe	070035		6635 01 579 6899
Acoustic Extension Probe Set (5 Pieces)	000005	10114	5355 01 270 6833
3-inch Solid Probe	040045		6635 01 579 6901
Concentrator Set (3 Pieces)	000065		6635 01 579 6932
Operator's Manual	005010		

Intrinsically Safe: ANSI/UL 913-88, for DIVISION 1, CLASS I, Groups A, B, C and D, CLASS II, Groups E, F, G and CLASS III. It also complies with DIVISION 2, CLASS I, Groups A, B, C and D, CLASS II, Groups F, G, and CLASS III.

*TO assigned by U.S. Air Force

CTRL UL101 Electrical Inspector

GSA Advantage!®
GSA Contract Number: GS-06F-0001N
Cage Number: 62373

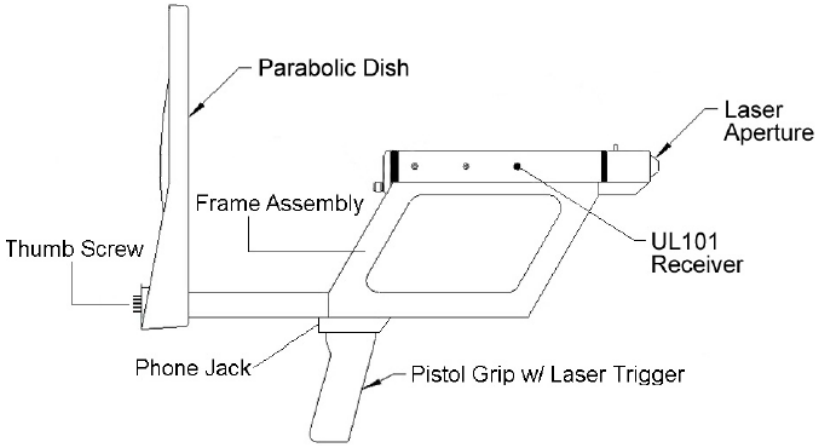

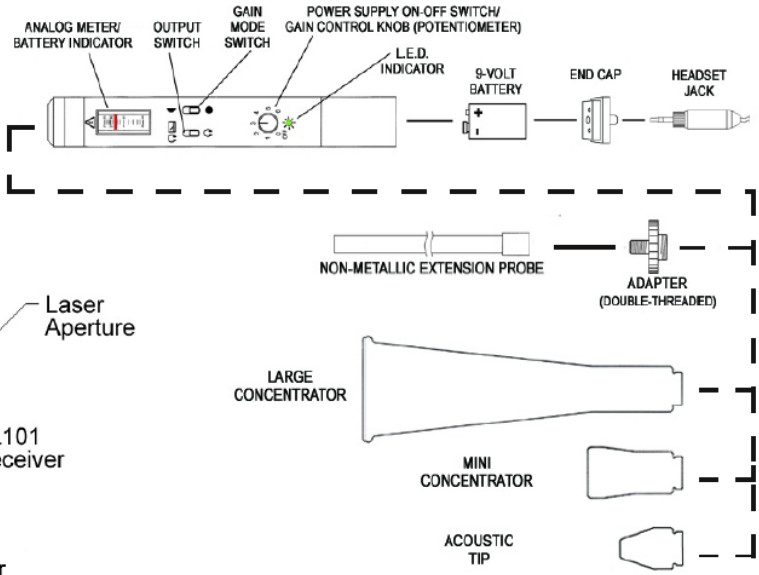

Inspect Electrical Panels Safely

Improve safety practices and locate potential points of failure in critical equipment quickly with the CTRL UL101 Electrical Inspector. Electricity, escaping in high voltage lines or jumping across gaps in electrical connections, disrupts the molecules in the air and produces ultrasound. The CTRL UL101 Electrical Inspector converts the ultrasound generated into audible sound. The inclusion of the concentrator set and polycarbonate extension probe allows for the inspection of dangerous electrical equipment from a safe distance with no need to remove panels.

Power Distribution & Transmission Has A Cost-Effective Solution

Leaking or tracking voltage can be serious at any specific temperature rise and special provisions should be taken to determine the severity. Load demands and the critical nature of particular components should also be considered while determining severity. It is important to document all inspection routes for familiarization of all components inspected, as well as identify systems unable to be tested due to lack of electrical load or lack of access. Using the CTRL UL101 Electrical Inspector provides an affordable, effective solution to reducing transmission loss and outages.

Predictive

Early detection of corona discharge, tracking, & arcing.

Accurate

Detect problems when no heat is present; used with or without infrared.

Safety

Inspect from great distances. There is no need to open electrical panels.

Costs

10 to 20 times less than a corona camera.

Power Transmission

Corona discharge is a major contributor to energy loss and also Radio Frequency Interference.

Electrical Inspection

Arcing - indication that a failure has occurred
Tracking - detectable even when infrared cannot

Leak Detection

Find leaks from further away and pinpoint to exact source without use of a scissor lift.

Steam Leaks/Traps

Detect leaks and operation from a safe distance.

CTRL Ultrasound Training

On-Site Training and Implementation Enables Our Clients to Learn and Integrate the Maximum Potential Savings Opportunities for Ultrasound Condition Based Monitoring.

Ultrasound Certified Training Level 1
(p/n 090040)

CTRL Systems level 1 certification uses parts of ISO 29821 and ISO 18436 to outline methods and requirements for carrying out condition monitoring and diagnostics of machines using scan mode and contact mode ultrasound to provide measurement, data interpretation, and assessment criteria. These techniques are typically carried out on operating machinery under a range of conditions and environments. CTRL's ultrasound detector is a passive technology that detects acoustic anomalies produced by machines.

The skills and expertise of the practitioner performing the measurements and analyzing the data are critical to the effective application of ultrasound. A practitioner of ultrasound, with knowledge based and practical training should be able to develop proper techniques to incorporate methods and procedures that lead to reliable and repeatable ultrasound inspection results.

Training Options	CTRL Part #	DLA Part #	NSN
Ultrasound Certified Training Level 1	090040		
Per Person at Scheduled Training Course in a Designated City. Contact CTRL Systems for a List of Dates and Locations			

On-Site Ultrasound Training

CTRL will travel on-site to provide a comprehensive training program that includes extensive classroom training as well as hands-on equipment training. This program was designed to bring the classroom to you while providing input and practice on your equipment. We train up to 10 people per class at your facility.

- A review of the benefits of ultrasonic inspection and the basic principals of ultrasound
- Demonstrations of how the technology can be used for a wide variety of applications
- Tips and techniques for determining the condition of critical bearings, pinpointing gas leaks, air leaks and more
- Hands-on experience with ultrasound technology in your facility with your equipment
- Set up of InCTRL including establishing baselines on critical equipment
- Identify procedures & steps to integration
- Train up to 10 people

Training Options	CTRL Part #	DLA Part #	NSN
On-Site Ultrasound Training	090030		
Max: 10 Persons Per Class			

CTRL UL101 Ultrasound Receiver

Specifications

Receiver / Transmitter Dimensions	8.75” x 1.26” x 1.26” (222 x 32 x 32 mm) 4.125” x 1.26” x 1.26” (105 x 32 x 32 mm)
Receiver / Transmitter Weight	11.6 oz (330 g) 6.2 oz (175 g)
Housing	Extruded Aluminum, wall thickness .09” (2.3 mm)
Power Supply	9-Volt Alkaline
Battery Life	Receiver: > 45 hours Transmitter: > 300 hours
Distance of Reception	Up to 150 feet (without PowerBeam300)
Sensitivity Threshold	Minimum Intensity: 10^{-12} W/m^2 (0 dB SPL) Minimum Ultrasonic Pressure: 2.0 x 10^{-5} PA @ 40 kHz
Frequency Bandwidth	1.8 - 2.2 kHz @ level 0.7 (or -3 dB SPL)
Working Resonance Frequency	40 kHz +/- 1.0 kHz
Operating Temperature Range	-4° to +130° F (-20° to +54° C)
Headset	Industrial Grade/600-Ohm Impedance 21-24 dB External Noise Attenuation
Warranty	1 -year parts & labor Extended warranty available

CTRL is the Expert in Acoustic Ultrasound

Selected for International Space Station, Navy, Army, Air Force & More

What can CTRL Systems do for you?

CTRL Systems is a designer and manufacturer of ultrasound detection systems for maintenance. Manufacturers face many challenges, such as extending the life and improving the performance of equipment. It is sometimes necessary to do these things with limited resources – less personnel, less time, and more demands.

A good predictive maintenance, energy savings, and quality control program can prevent unexpected failures, downtime, and waste. CTRL's ultrasonic technology provides an efficient and cost effective method for monitoring critical equipment and leak detection. Frequent inspection, documentation, and trending are crucial for an effective program.

CTRL can work closely with your organization to provide a seamless integration of ultrasound technology into current processes for the maximum level of ROI and satisfaction.

CTRL Systems, Inc.
1004 Littlestown Pike, Suite H
Westminster, MD 21157 USA
ph. (410) 876-5676
fax. (410) 848-8073
https://www.ctrlsys.com